Data-Sheet-Variable Vacuum Capacitor

CKTBS300/15/150

GLVAC

www.glvac.com

Specification	
Capacity C_{max}(nominal)	300pF
Capacity C_{min}(nominal)	30pF
Voltage (Peak Test U_{pt}/Peak Working U_{pw})	15KVp/9KVp
Capacity Tolerance (Linear Range)	10%
Max.Current I_{max} at 13.56MHz with	150Arms
Water Cooling	1 L/min
Capacitance per turn	20.5pF/turn
Turns	14.5±1
Torque	≤0.2 N·m
Net Weight	1.6kg

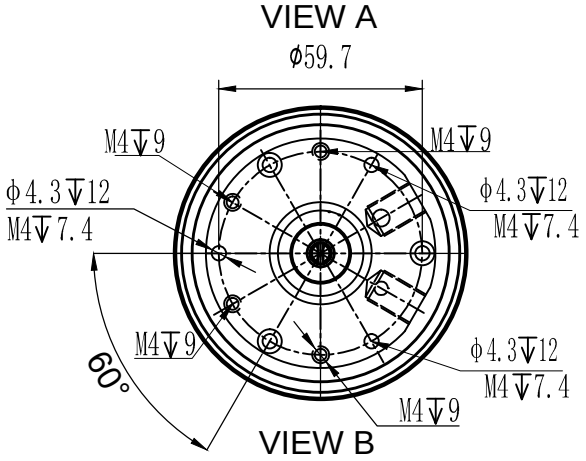

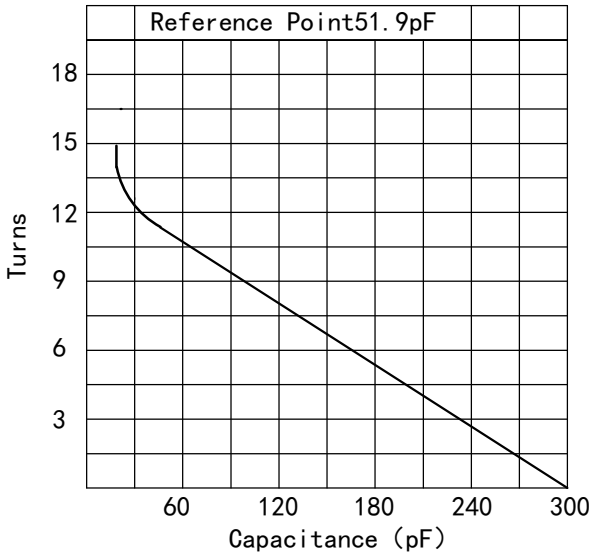

Imax for 1L/min water cooling; max.water temp.at inlet: 70℃

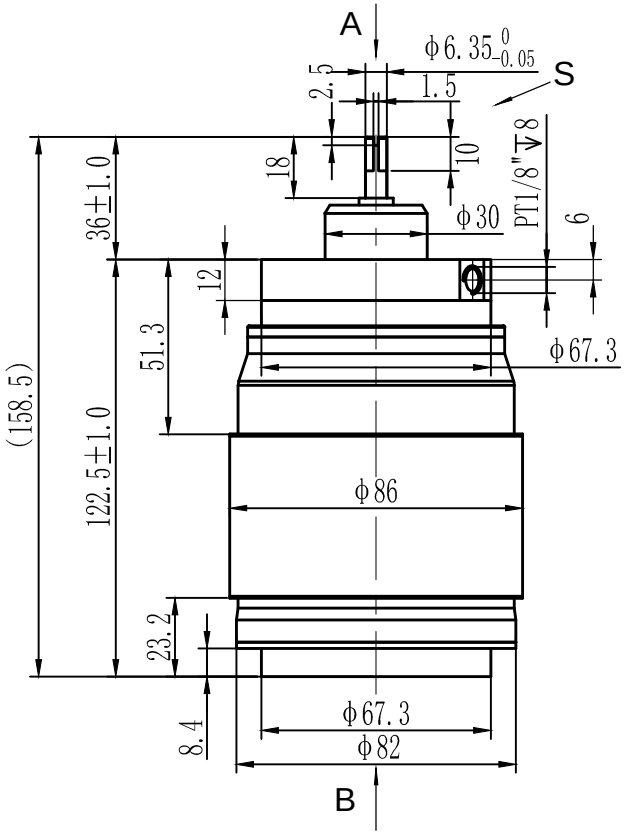

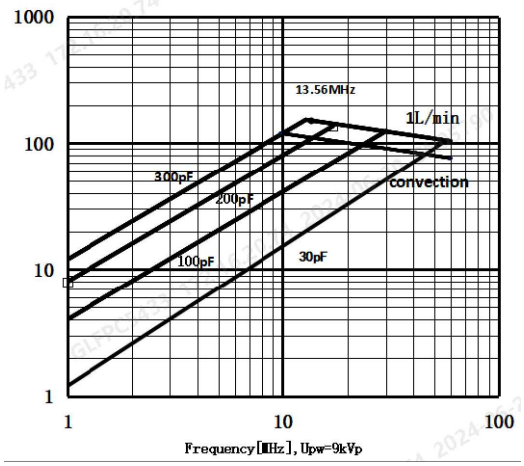

UNLESS OTHERWISE SPECIFIED:
≤30: ±0.5 30～400: ±1.2 ≥400: ±2.5 ∠: ±1°

Rev: 10 Page1/1 Issue: 17-Oct-2024

Address:ST28 Xihu Road,Kunshan,Jiangsu Province,China
TEL:+86(512)36872110
Web:www.glvac.com
FAX:+86(512)36872122
E-mail:e-sales@glvac.cn
Zip Code:215333